Wac Corporal Interstage

Staging components and arrangement (1:10 scale)
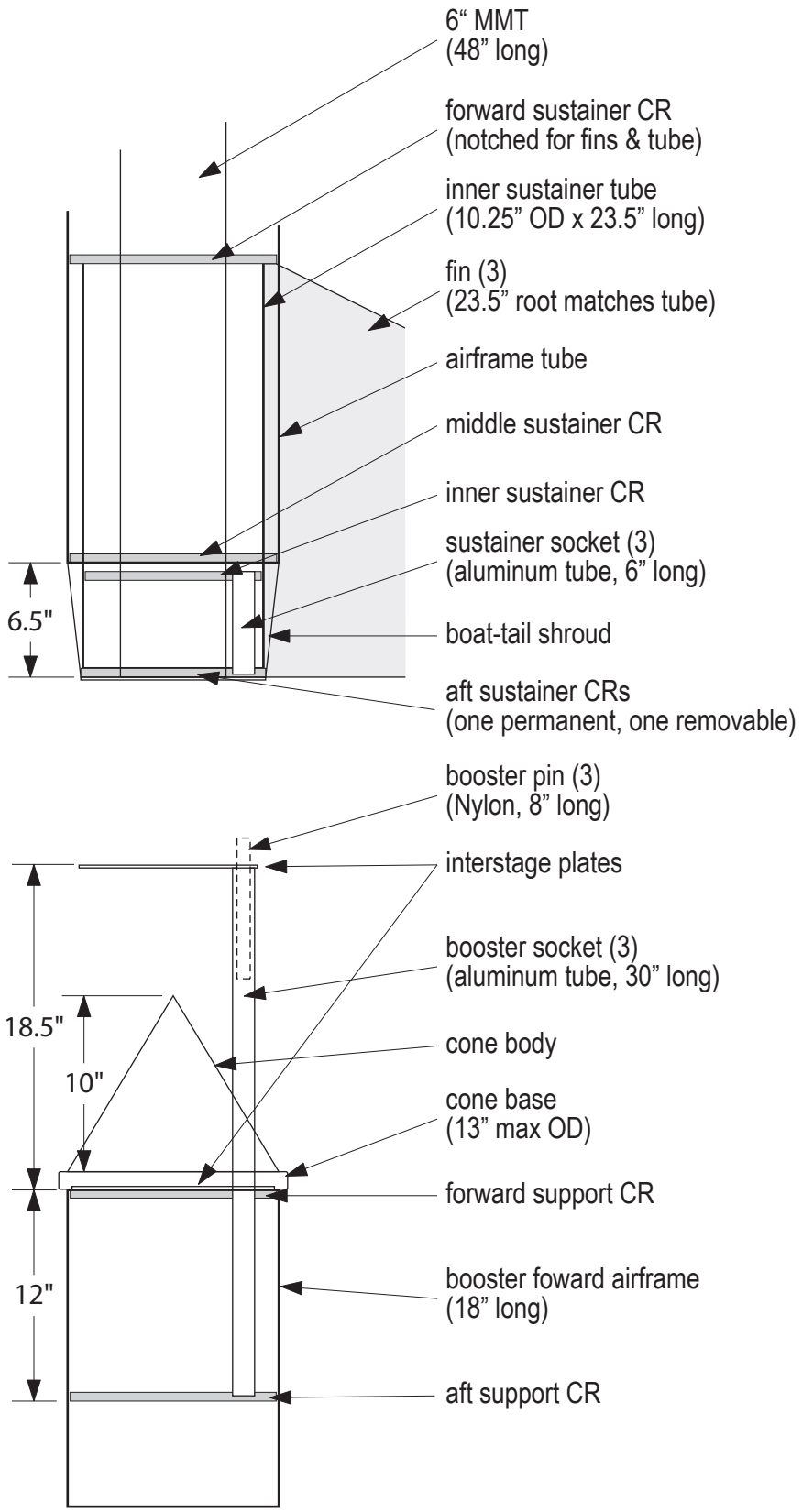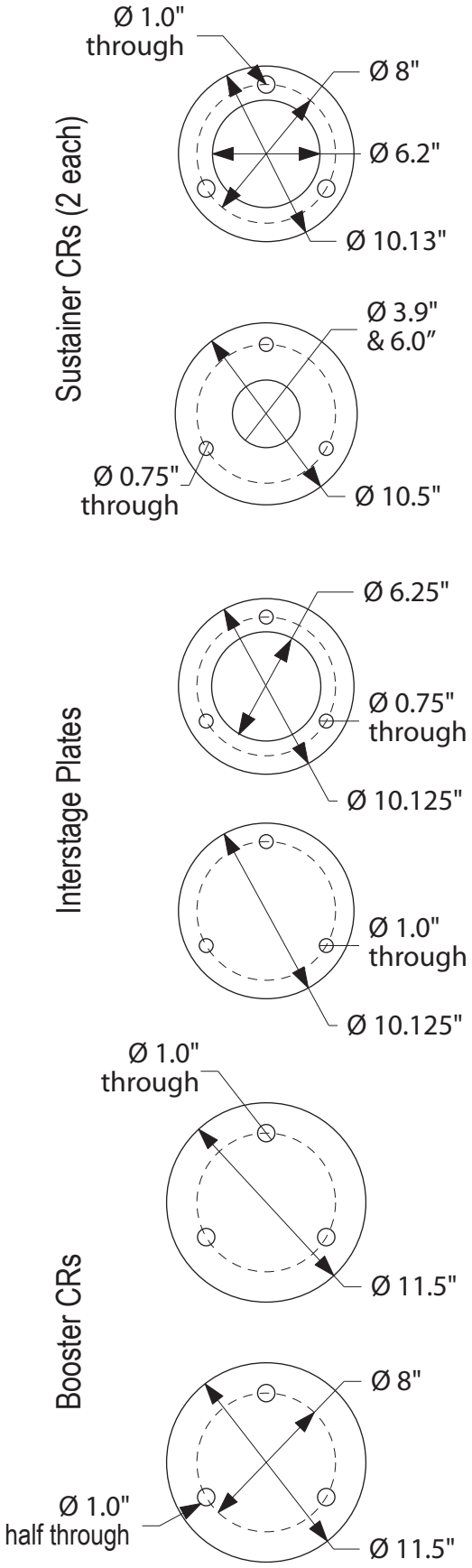
John Coker
john@jcsw.com